VAULT DESIGN NOTES:
1. ALL PIPING & VALVES WITHIN VAULT ARE 4 INCH DIAMETER.
2. HATCH DESIGN LOADS: PEDESTRIAN RATED.
3. VALVES AND VAULT PIPING SYSTEM FACTORY TO TESTED 100 PSI AFTER ASSEMBLY.

(51) NOT USED.

(52) FLYGT ALUMINUM ACCESS HATCH PRECAST INTO VAULT TOP SLAB. PEDESTRIAN RATED. FDRND-50X74SH-ROMTEC

(53) 4" DI PIPE SPOOL (PE x PE)

(54) 4" DI SLEEVE COUPLING

(55) 4" DI PIPE SPOOL, (FLG. X FLG).

(56) 4" FLANGED DI BODY SWINGFLEX CHECK VALVE, VALMATIC SWINGFLEX MODEL 504A (FBEC). PROVIDE BOTH VALVES WITH OPTIONAL MECHANICAL INDICATOR (MI) AND ONE WITH OPTIONAL BACKFLOW ACTUATOR (BF).

(57) 4" ECCENTRIC PLUG VALVE VALMATIC CAMCENTRIC MODEL 5804RN, (FBEC). FLG X FLG WITH 2" DIRECT NUT.

(58) 4" DI BEND, 90 DEGREE, (FLG. X FLG.).

(59) 4" DI TEE, (FLG X FLG)

(60) 4" DI PIPE SPOOL (FLG. X FLG.)

(61) 4" ASHCROFT TYPE 81 ISO-RING SENSOR WITH ASHCROFT 1009 PRESSURE GAUGE 3 1/2" DIAL FACE, STAINLESS STEEL CASE.

(62) 4" DI PIPE SPOOL (FLG x PE)

(63) ADJUSTABLE PIPE SUPPORT, STANDON (TYP OF 4).

(64) 4" VAULT SEAL, KOR-N-SEAL (TYP OF 3).

(65) 4" RETAINER GLAND CENTERED IN THRUST COLLAR, ROMAGRIP (TYP OF 3).

(66) SLEEVE COUPLING, DI VAULT PIPING TO FORCE MAIN PIPING (BY OTHERS).

(67) FORCE MAIN (BY OTHERS).

(68) PRECAST VAULT SUMP FOR GRAVITY DRAIN TO APPROVED POINT.

(69) GALVANIZED VALVE VAULT LADDER.

NOTE: WETWELL TOP SLABS IS PEDESTRIAN RATED.

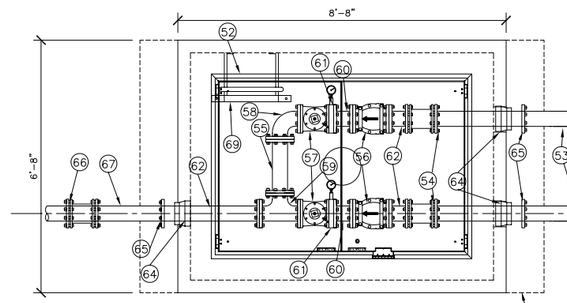

PLAN

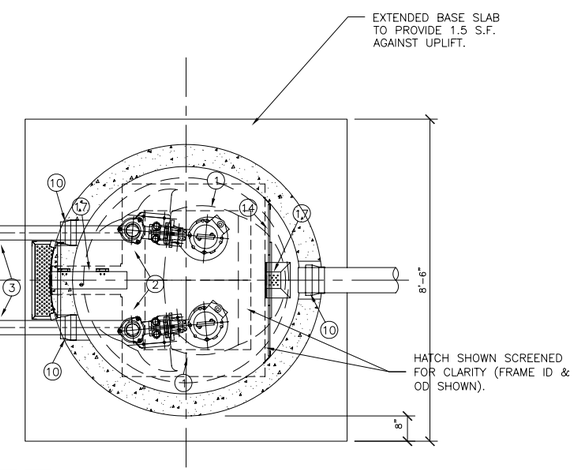

PLAN

NOTE: VALVE VAULT TOP SLAB IS PEDESTRIAN RATED.

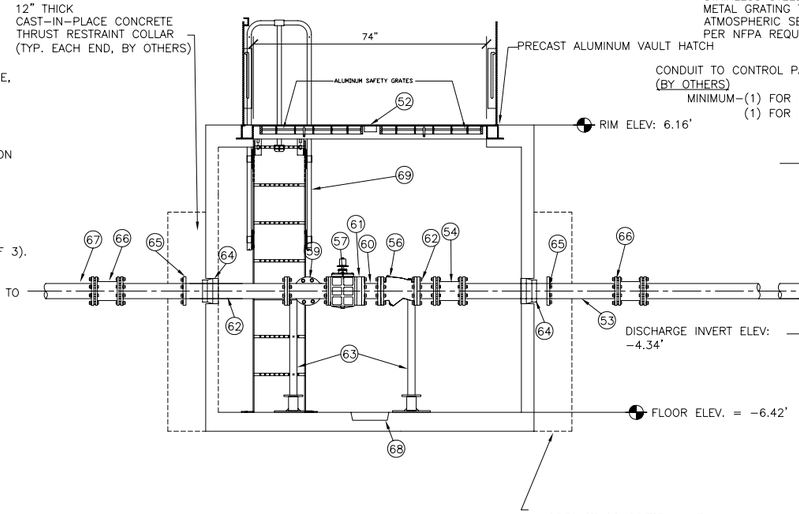

PROFILE

4'' VALVE VAULT

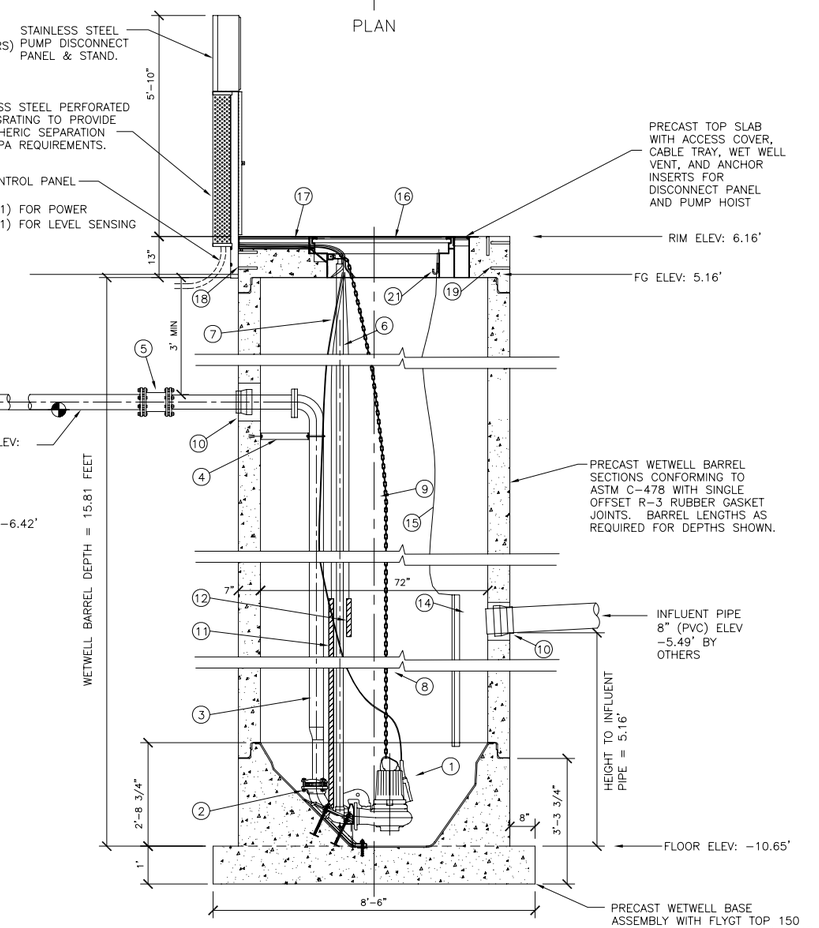

PROFILE

6' DIAMETER WETWELL

SCALE: 1/2" = 1'-0"

LEVEL ELEVATON	DISTANCE-BETWEEN-POINTS	SET POINT DESCRIPTION
-5.49		SEWER INVERT IN
-5.49		HIGH LEVEL ALARM
	0.50'	SENSOR SPACING
-5.99'		LAG PUMP START
	0.50'	SENSOR SPACING
-6.49		LEAD PUMP START
	1.50'	SENSOR SPACING
7.99'		PUMP STOP
	2.66'	DISTANCE
-10.65		FLOOR ELEVATION

NOTE:
ALL MATERIALS SHOWN ON THIS SHEET WILL BE SUPPLIED BY ROMTEC UTILITIES AND DELIVERED TO THE SITE AFTER THE HOLE HAS BEEN EXCAVATED AND SHORED. THE CONTRACTOR WILL SUPPLY A CRANE OF SUFFICIENT SIZE TO LOWER ALL THE CONCRETE PIECES INTO THE HOLE SAFELY. THE CONTRACTOR WILL INSTALL THE WET WELL, VALVE VAULT AND METERING VAULT. ROMTEC UTILITIES WILL PROVIDE A REPRESENTATIVE FOR TECHNICAL ASSISTANCE ON THE DAY OF INSTALLATION TO ANSWER ANY QUESTIONS THAT MAY ARISE. THE CONTRACTOR IS RESPONSIBLE FOR ALL PLUMBING AND ELECTRICAL CONNECTIONS AND INSTALLATION. ITEMS NOTED AS "(BY OTHERS)" WILL BE PROVIDED AND INSTALLED BY THE CONTRACTOR. ROMTEC UTILITIES WILL NOT INSTALL ANY OF THE COMPONENTS SHOWN ON THIS PAGE.

(1) SUBMERSIBLE NON-CLOG SEWAGE PUMPS, FLYGT MODEL NP-3102 (257). PROVIDE ONE PUMP WITH MIX FLUSH VALVE.

(2) 3-INCH FLYGT DISCHARGE ELBOW.

(3) 4" STAINLESS STEEL DISCHARGE PIPING (SCHED 40) WITH 4" X 3" ECCENTRIC REDUCER AT DISCHARGE ELBOW, FACTORY TESTED. PROVIDE ALL PIPE PENETRATION(S) WITH RUBBER BOOTS (KOR-N-SEAL).

(4) STAINLESS STEEL DISCHARGE PIPE ANCHOR BRACKET.

(5) DI SLEEVE COUPLING, STAINLESS STEEL TO DI PIPING

(6) TWO 2-INCH SCHEDULE 40 STAINLESS STEEL GUIDE BARS FOR EACH PUMP (FULL HEIGHT). ATTACH TO HATCH UNI-STRUT WITH FLYGT UPPER GUIDE BAR BRACKET.

(7) PUMP POWER CABLE WITH QUICK CONNECT COUPLING AT PUMP DISCONNECT PANEL. PROVIDE EACH CABLE WITH A STAINLESS STEEL BASKET CABLE GRIP ATTACHED TO HOOK ON UPPER GUIDE BAR BRACKET.

(8) STAINLESS STEEL CHAIN SLING FOR PUMP RETRIEVAL USING FLYGT GRIP-EYE. ATTACH TO PUMP LIFTING HANDLE.

(9) 1/4" STAINLESS STEEL CHAIN (S-4 ATTACHED TO PUMP HANDLE. PROVIDE CHAIN WITH 3/8" & 1/2" STAINLESS STEEL BOW SHACKLE WITH SCREW PIN ATTACHED TO PUMP HANDLE. ATTACH UPPER END OF CHAIN TO HOOK ON UPPER GUIDE BAR BRACKET.

(10) WETWELL SEAL, KOR-N-SEAL.

(11) PUMP LIQUID LEVEL CONTROL PROBE, FLYGT MULTI-TRODE PROBE.
PROBE LENGTH = 5 FEET (1.5 METERS)
NUMBER OF SENSORS = 10
SENSOR SPACING = 6-INCHES. PROVIDE MULTITRODE MTAK-1 PROBE MOUNTING BRACKET MOUNTED TO HATCH UNI-STRUT.

(12) REDUNDENT CONTROL SYSTEM. CUSTOM MULTI-TRODE 3 SENSOR PROBE FOR REDUNDANT HIGH LEVEL ALARM AND PUMP START COMMAND.

(13) NOT USED.

(14) HDPE INFLUENT DEFLECTOR WITH FULL SIZE INSPECTION HOLE AND GUILLOTINE COVER.

(15) 1/8" STAINLESS STEEL LIFTING CABLE FOR INFLUENT DEFLECTOR INSPECTION HOLE COVER. PERMANENTLY ATTACH UPPER END OF CABLE TO HATCH UNI-STRUT.

(16) FLYGT ALUMINUM ACCESS HATCH PRECAST INTO WETWELL TOP SLAB. PROVIDE WITH SAFE-HATCH SAFETY GRATE BY FLYGT. FLED-33X50AOSH-700

(17) ALUMINUM CABLE HATCH AND WETWELL VENT PRECAST INTO WETWELL TOP SLAB. PROVIDE WITH STAINLESS STEEL HINGES AND SLAM-LOCK.

(18) STAINLESS STEEL ANCHOR INSERTS FOR PUMP DISCONNECT PANEL.

(19) STAINLESS STEEL ANCHOR INSERTS FOR PUMP DAVIT CRANE BASE.

(20) NOT USED.

(21) 3/16 STAINLESS STEEL CABLE HOOKS

NO.	DATE	DESCRIPTION	BY
3	11-14-06	ADDED FLOOR ELEVATION TO V.V.	AD
2	10-31-06	CHANGED SILS STEEL VV PIPE TO DI	AD
1	9-29-06	SUBMITTAL DRAWING	AD

REVISIONS

VERIFY SCALE
BAR IS ONE INCH ON ORIGINAL DRAWING
0 1"
IF NOT ONE INCH ON THIS SHEET, ADJUST SCALES ACCORDINGLY

DSN. –
DRN. TMT
CKD. –
DATE:DEC 2000

ROMTEC UTILITIES
18240 NORTH BANK ROAD
ROSEBURG, OR 97470
(541)-496-3541
FAX (541)-496-0803

DSS COMPANY
FERGUSON RDC

6' WETWELL
4" DISCHARGE & VAULT
FLYGT NP 3102 PUMPS

SHEET 1 OF

JOB NUMBER
RMTC 0171